Achievements and Prospects of Solid-State RF Power Amplifier towards Green Accelerator.

Technology fusion of mobile communication, broadcasting devices, and accelerators. Guide to low-cost, high reliability solution.

October 29, 2019

Presented by Riichiro Kobana
R&K COMPANY LIMITED - President

R&K Company Limited
721-1 Maeda,Fuji-City,Shizuoka-Pref.416-8577 Japan
Tel : +81-545-31-2600 E-mail : info@rkco.jp
Fax : +81-545-31-1600 URL : http://rk-microwave.com

Index

R&K Company Limited
721-1 Maeda,Fuji-City,Shizuoka-Pref.416-8577 Japan
Tel : +81-545-31-2600 E-mail : info@rkco.jp
Fax : +81-545-31-1600 URL : http://rk-microwave.com

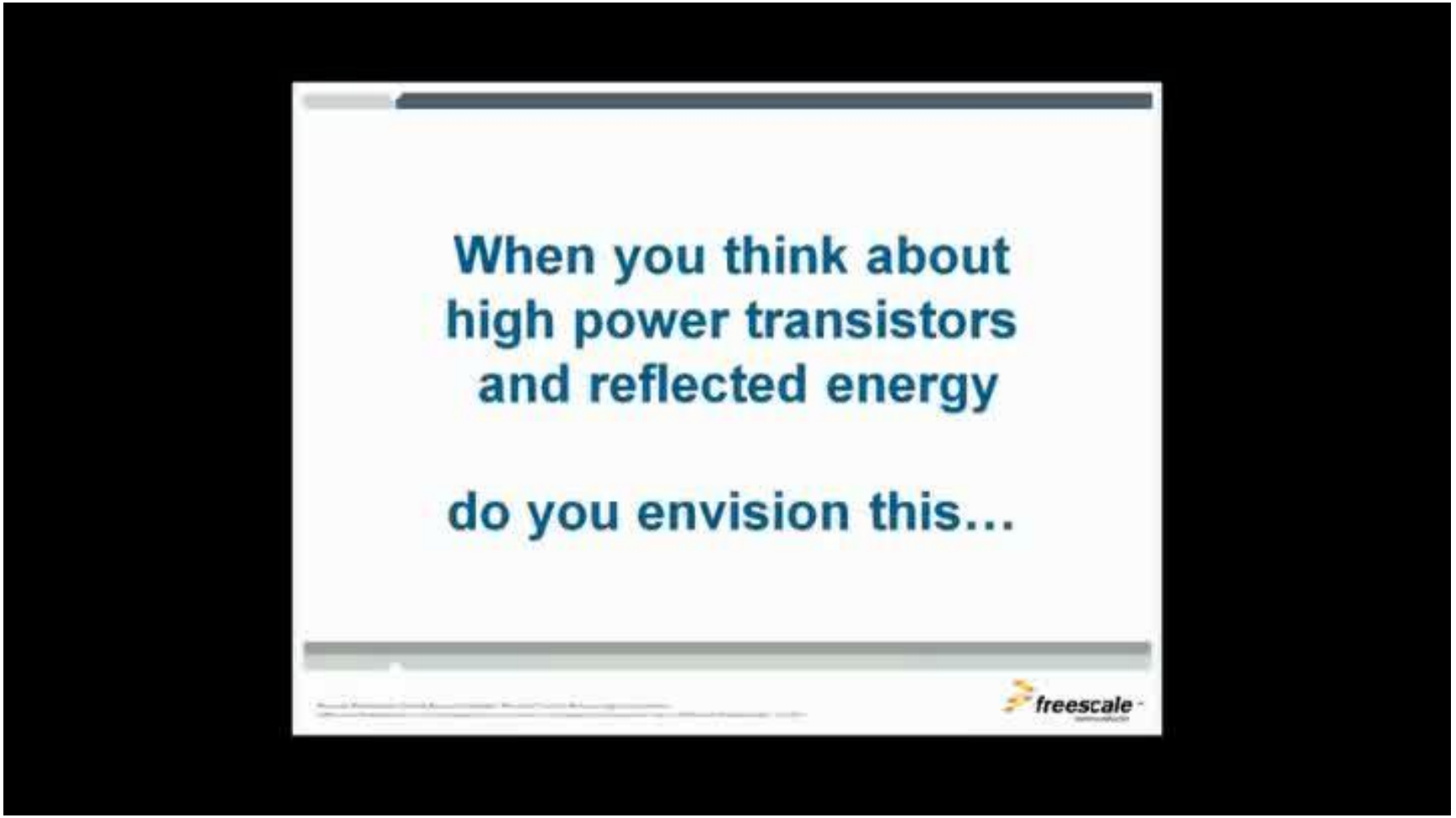
When you think about
high power transistors
and reflected energy
do you envision this…
freescale

SSA Si Transistor Trends

Trends in LDMOS Cost vs Performance

No Scale

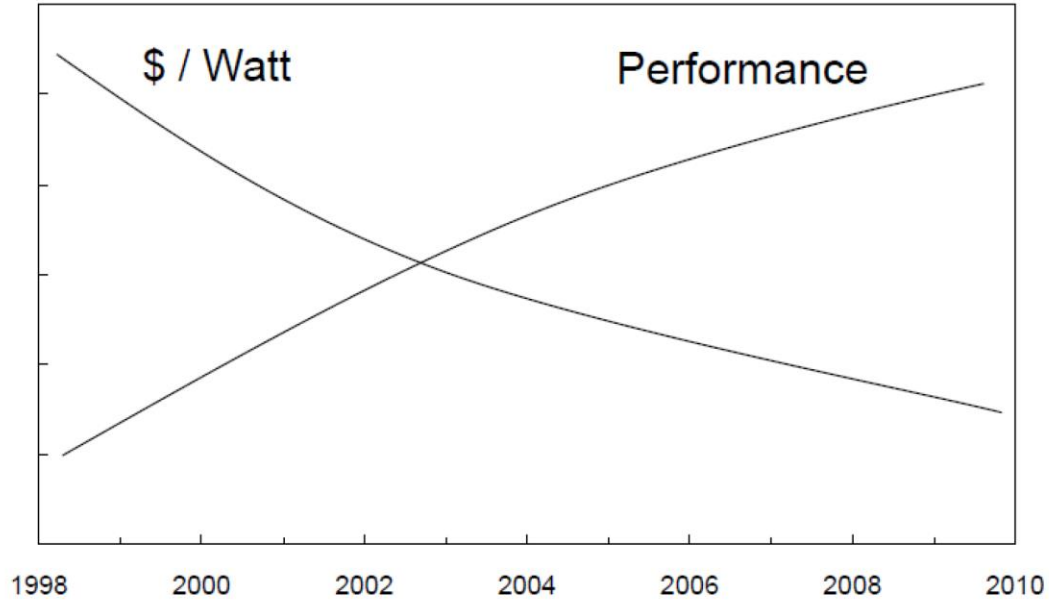

Tao Tang will talk tomorrow about benefits of using GaN Transistors

This behavior has enabled entire industries where no commercially available / viable solution was possible before

Source Choices

- Use SSAs to drive single cavities
  - Have quotes from several vendors
  - 1.3 GHz units used successfully at ELBE/HZDR and Cornell
- Use 300 kW klystrons to drive 48 cavities (6 cryomodules)
  - Max power available and near practical limit for rf distribution
  - Developed by Toshiba for KEK ERL Demo, and by CPI for HZB and TRIUMF applications (Klystron + PS ~ 6 $/W)
  - No long term operation experience but not pushing limits - CPI and e2V have been selling 110-120 kW tubes

COMPARISON WITH VACUUM TUBES

Advantages of transistors over vacuum tubes

1. Precise control
2. Ease of use
3. Reliability
4. Size and weight

12

1. Precise Control

Accurate power control over full dynamic range

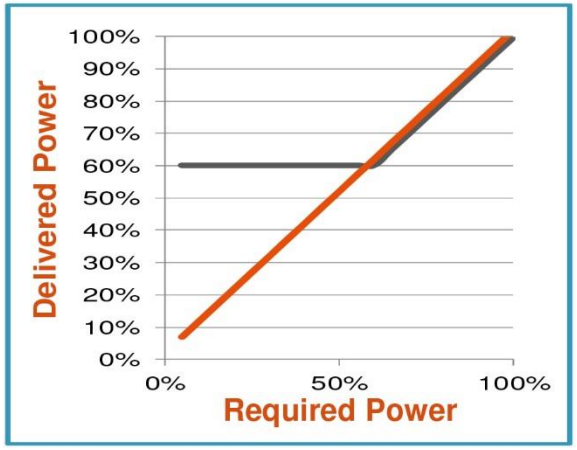

•Low-cost magnetrons work only on or off
•High-end magnetros: can control output power only above 60% of maximum power
•With transistors, power can be set to any level from less than 1% to 100% by controlling the RF input, the gate and drain voltage, or by pulsing the RF

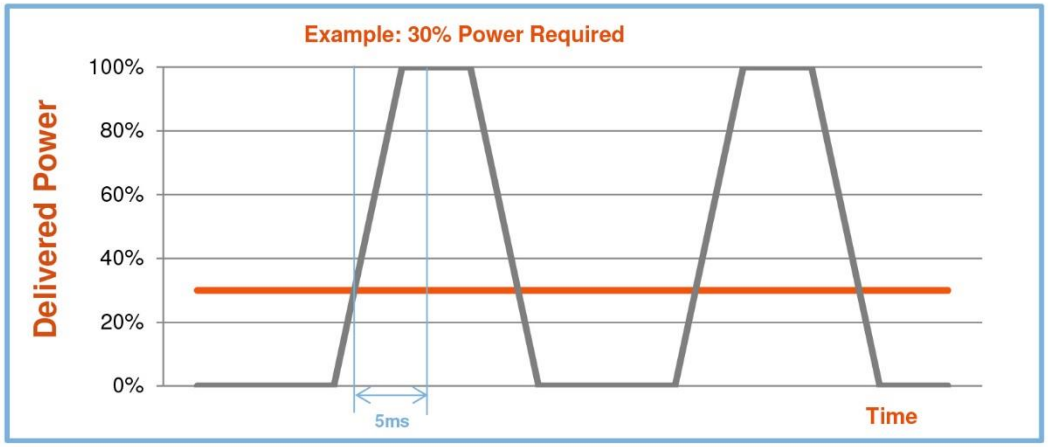

• The magnetron average output power is managed by on/off duty cycles
• Low efficiency at low power (on/off time = 5 ms)

Magnetron
Solid State

13

2. Ease of use

- Rapid response to power needs change (by power control or frequency shifting)
- Instant-on: No warm-up or cool down delays
- Uses reliable, compact, and efficient switch-mode power supplies
- Low voltage supply for better safety: 50 V versus 20,000 V
- Easy integration and modular
- No complicated electro-mechanical controls and sequencing
- Insensitive to vibration

15

3. Reliability

- Transistors ensure RF heating systems remain **always on**, dramatically reducing manufacturing down time.
  - High-end 915 MHz magnetrons lifetime is 2000 - 6000 hours (8 months if 24/7)
  - Magnetron are difficult to troubleshoot and service, requiring an interruption of the production line for several hours or days
  - Transistors lifetime (MTTF) is 100 years
  - Transistors show no performance degradation over time

- Transistors are **fault resistant**
  - redundancy enables hot swap with limited impact (the system will continue to run at a reduced power)

16

4. Size and weight

- At 915 MHz, transistor-based RF generators can be half the size and weight of a magnetron-based generator.

750 W @ 915 MHz

17

Mass Production Experience (SSA for PHS Base Station)

1995: R&K started designing and developing SSA for mobile communication base station

↓

2000: Accumulated sales of SSA: 20 thousand units

↓

2002: Move into new premise.

Accumulated sales of SSA: 1 million units.

↓

2003: Accumulated sale of SSA: 1.2 million units

↓

2004: Built 2nd Factory Building

Total 2.3million SSAs shipped!

*This shipment record was introduced on 50th year anniversary edition of Microwave Journal magazine

2-A. R&K Technical Capability and Strength

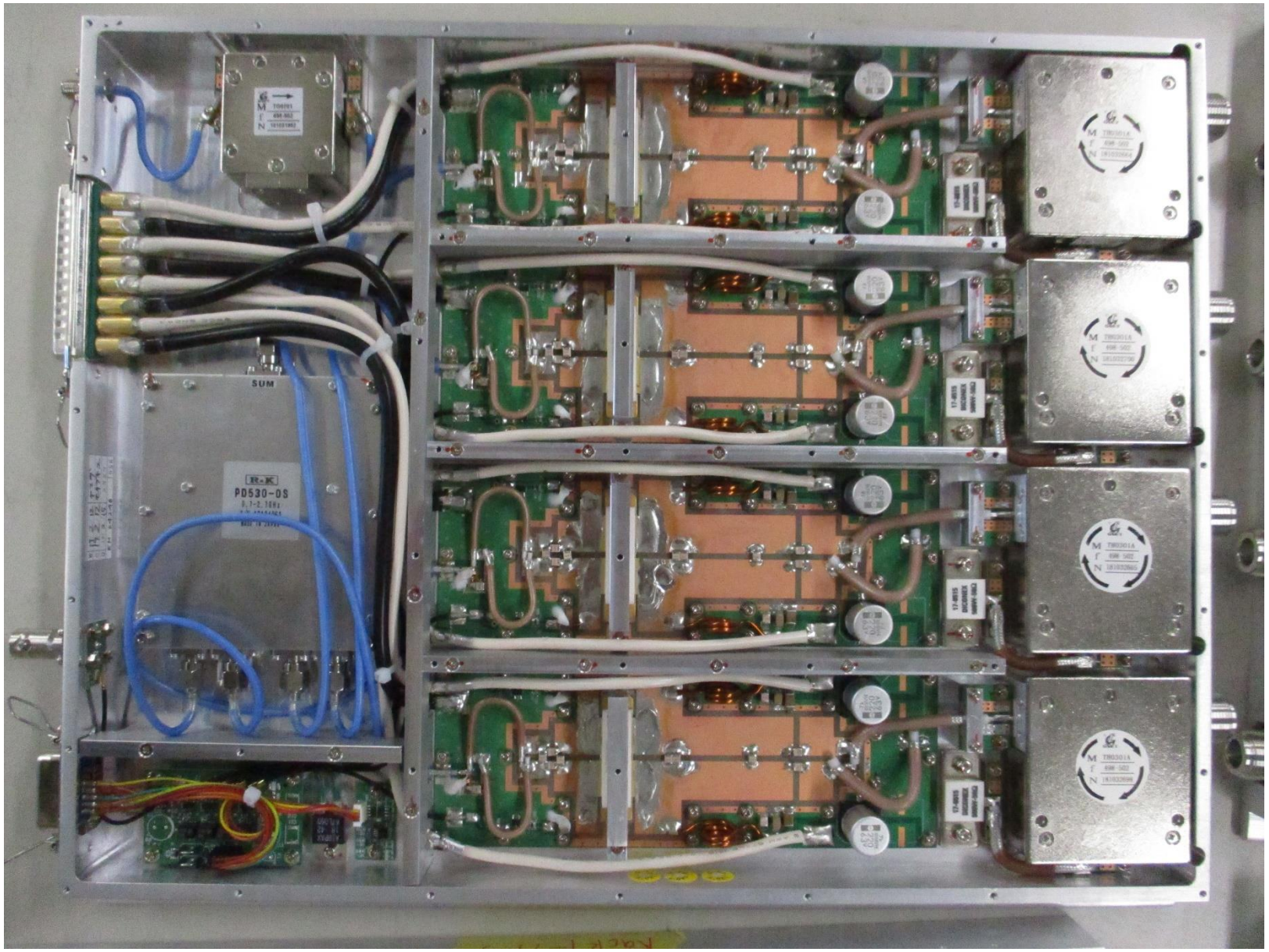

2-B. R&K Technical Capability and Strength

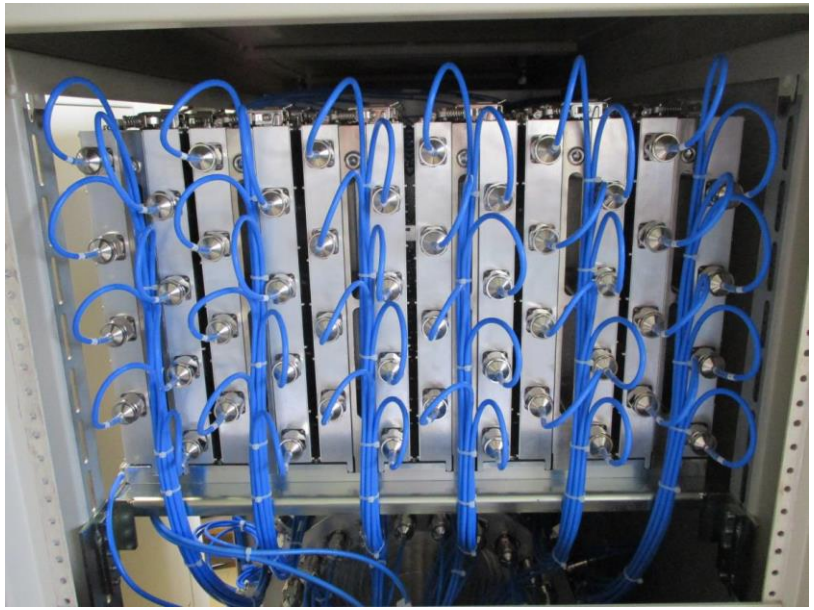

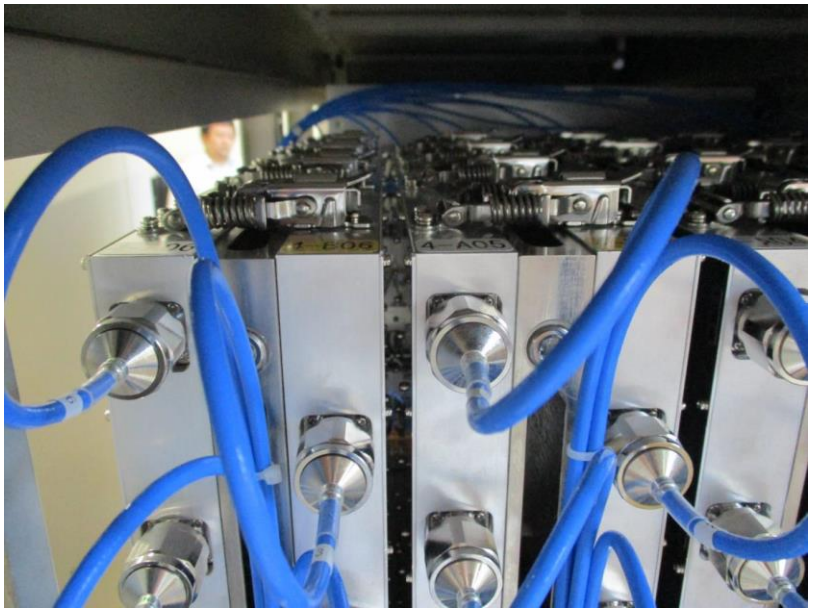

CA500BW2-2060M Test data

Device : D.A.(ALM0105-4748-SMA / R&K) + F.A.(MRFE6VP61K25N / NXP)Circulator(CSH498-502M1KA2 / Westmag)
Signal : CW
Typical Performance: VDD = 50 Volts, IDQ = 150 mA
Water Temperature : +28℃

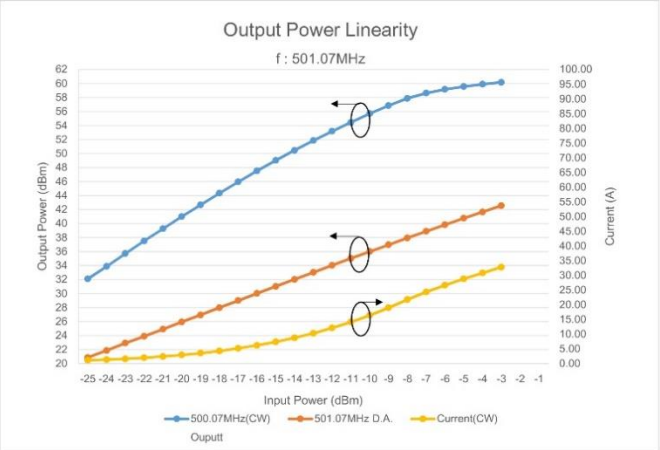

Input(CW)	499.07MHz D.A.	499.07MHz(CW) Output	Current(CW)	Device DC_Eff(CW)	Total Gain(CW)
-25	21.28	32.32	1.12	2.8	11.04
-24	22.23	34.07	1.38	3.5	11.84
-23	23.24	35.87	1.68	4.3	12.63
-22	24.24	37.66	2.04	5.5	13.42
-21	25.27	39.42	2.48	6.8	14.15
-20	26.23	41.12	3.02	8.3	14.89
-19	27.27	42.81	3.66	10.1	15.54
-18	28.27	44.44	4.40	12.3	16.17
-17	29.3	46.08	5.36	14.8	16.78
-16	30.3	47.61	6.40	17.7	17.31
-15	31.31	49.12	7.64	21.0	17.81
-14	32.31	50.54	9.02	24.7	18.23
-13	33.31	51.94	10.68	28.9	18.63
-12	34.3	53.26	12.52	33.4	18.96
-11	35.28	54.53	14.54	38.6	19.25
-10	36.26	55.77	16.90	44.2	19.51
-9	37.23	56.92	19.50	49.9	19.69
-8	38.2	57.96	22.36	55.3	19.76
-7	39.15	58.74	25.20	58.7	19.59
-6	40.07	59.27	27.60	60.5	19.20
-5	41	59.70	30.00	61.4	18.70
-4	41.9	60.04	32.20	61.7	18.14
-3	42.81	60.31	34.30	61.5	17.50
-2					
-1					
	(dBm)	(dBm)	(A)	(%)	(dB)

@Po=1kW_Junction Temperature 87.5℃ **Derating** 38.9%

Input(CW)	500.07MHz D.A.	500.07MHz(CW) Ouputt	Current(CW)	Device DC_Eff(CW)	Total Gain(CW)
-25	21.04	32.09	1.12	2.7	11.05
-24	22.06	33.87	1.34	3.4	11.81
-23	23.06	35.71	1.62	4.3	12.65
-22	24.1	37.52	2	5.4	13.42
-21	25.06	39.27	2.44	6.7	14.21
-20	26.06	41.01	2.98	8.2	14.95
-19	27.07	42.67	3.6	10.0	15.60
-18	28.09	44.35	4.36	12.2	16.26
-17	29.1	45.96	5.26	14.7	16.86
-16	30.12	47.52	6.3	17.6	17.40
-15	31.13	49.03	7.52	20.9	17.90
-14	32.13	50.46	8.9	24.6	18.33
-13	33.14	51.86	10.48	28.9	18.72
-12	34.14	53.19	12.3	33.5	19.05
-11	35.12	54.46	14.32	38.5	19.34
-10	36.1	55.71	16.66	44.2	19.61
-9	37.07	56.86	19.26	49.9	19.79
-8	38.04	57.89	22.04	55.2	19.85
-7	38.99	58.65	24.72	58.6	19.66
-6	39.92	59.17	27.2	60.0	19.25
-5	40.85	59.58	29.4	60.9	18.73
-4	41.75	59.91	31.4	61.4	18.16
-3	42.67	60.18	33.40	61.3	17.51
-2					
-1					
	(dBm)	(dBm)	(A)	(%)	(dB)

@Po=1kW_Junction Temperature 88.9℃ **Derating** 39.5%

Input(CW)	501.07MHz D.A.	501.07MHz(CW) Output	Current(CW)	DC_Eff(CW)	Total Gain(CW)
-25	20.87	31.98	1.08	2.7	11.11
-24	21.86	33.77	1.32	3.4	11.91
-23	22.93	35.60	1.58	4.3	12.67
-22	23.89	37.42	1.96	5.4	13.53
-21	24.91	39.18	2.40	6.6	14.27
-20	25.94	40.93	2.92	8.2	14.99
-19	26.94	42.60	3.50	10.1	15.66
-18	27.99	44.27	4.26	12.3	16.28
-17	28.99	45.89	5.16	14.7	16.90
-16	30.01	47.47	6.18	17.7	17.46
-15	31.02	48.95	7.36	21.0	17.93
-14	32.02	50.42	8.74	24.8	18.40
-13	33.03	51.80	10.28	29.1	18.77
-12	34.03	53.16	12.14	33.7	19.13
-11	35.02	54.44	14.12	38.9	19.42
-10	36.01	55.69	16.42	44.7	19.68
-9	36.97	56.85	18.98	50.5	19.88
-8	37.94	57.87	21.76	55.7	19.93
-7	38.90	58.60	24.34	58.9	19.70
-6	39.83	59.11	26.60	60.5	19.28
-5	40.77	59.51	28.80	61.2	18.74
-4	41.66	59.84	30.80	61.6	18.18
-3	42.57	60.11	32.80	61.4	17.54
-2					
-1					
	(dBm)	(dBm)	(A)	(%)	(dB)

@Po=1kW_Junction Temperature 88.1℃ **Derating** 39.2%

500MHz, 1kW/CW RF Output vs Power Efficiency

Radial Combiner Product Examples

Broadband Products

・200MHz～1000MHz 4kW 16合成器

単体写真 | 最終出力ポート (コネクタ:EIA 1-5/8) | 16合成ポート (コネクタ:N) | システムラック組込み後

・1000MHz～2500MHz 2kW 16合成器

単体写真 | 16合成ポート (コネクタ:TNC) | システムラック組込み後

・2000MHz～6000MHz 100W 8合成器

単体写真 | 最終出力ポート (コネクタ:N) | 8合成ポート (コネクタ:SMA)

Narrowband Products

・509MHz±3MHz 20kW 64合成器

単体写真 | 最終合成ポート (コネクタ:EIA 7/16) | 16合成ポート (コネクタ:TNC)

・1275MHz±100MHz 600W 8合成器

単体写真 | 最終合成ポート (コネクタ:EIA 7/16) | 8合成ポート (コネクタ:SMA)

・5712MHz±20MHz 100W 8合成器

単体写真 | 最終合成ポート (コネクタ:N) | 16合成ポート (コネクタ:SMA)

R＆K社では、高周波大電力増幅器の電力合成器に、超低損失で、しかも奇数合成や素数合成での大電力合成が可能な『ラジアルコンバイナー』を採用することによりオールソリッドステートで、数kW～100kWの出力を実現します。
現時点での最大/最小の周波数帯域幅比は最大５倍です。
特に内部吸収抵抗を備えた製品が特徴でもあります。
現在、更なる広帯域化、大電力化を目指して、開発を進めています。

For CA200BW0.4-7282RP

200MHz±0.2MHz
POWER: 150kW/Pulse
36WAY-Combiner
INPUT: N
OUTPUT: 3-1/8 EIA

For CA1300BW10-6369R

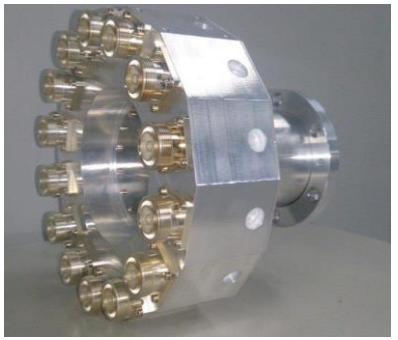

1300MHz±5MHz
POWER: 8kW/CW
14WAY-Combiner
INPUT: 7/16 EIA
OUTPUT: 3-1/8 EIA

GE
Critical Power

GP100 6 kW True Three Phase Rectifier

Applications

- Cloud Data Centers that want phase balanced IT loads
- Super Computers
- 380/480 V_{ac} Three Wire 3Ø directly to data cabinets
- Routers/VoIP/Soft and other Telecom Switches
- 48 V_{dc} distributed power architectures
- Industrial Applications

Advanced Features

- Remote Upgrade from RS485 (or I²C)
- Improved Power Metering Accuracy
- Preemptive Analytics

Use Scenarios

The GP100 Rectifier provides a high efficiency, intrinsically phase balanced way to power data center cabinets directly from 3 wire 3Ø 480Vac (or 380 Vac). The AC can be supplied by a UPS, Generator, or line transformer with any accepted winding or grounding configuration. The neutral wire is not connected to the GP100, so there is zero risk of neutral currents in any normal or fault scenario.

Should there be a line fault, the GP100 is compatible with GE TLE UPSs in Ring Bus or traditional configurations, as well as other UPSs with a transfer time of less than 8 ms. Should there be a rectifier fault, the GP100 is parallelable up to 100 units. In addition to applications without batteries on the output, the GP100 is suitable for use in traditional centralized battery applications, or in distributed systems with traditional or advanced battery technology. Isolated serial communications and extensive testing allow the GP100 to work in either n+1 or N+N configurations.

The GP100 System provides a full featured , N+N redundant 480Vac to 48Vdc battery reserve system in one 19" rack unit.Two GP100s and a GE Critical Power Edge controller in each cabinet allow 480Vac to be the only building level distribution voltage. Application tailored energy storage batteries can be deployed in data cabinets as needed. The standard GP100 is designed for international deployment, accepting 3 phase power from 380V (Global) or 480V (North American) sources. This system is an excellent choice for facility scale data applications requiring modular, very high efficiency AC to 48Vdc intermediate voltage conversion, such as in cloud data centers.

Features

- Compact 1RU form factor provides high power density of 27 Watts/Cubic inch
- Efficient with 96.5% efficiency from 50 to 100% load
- Balanced draw from each of the three AC input phases
- 6000 Watts at 48 Vdc from three wire 3Ø 380 or 480 Vac (no neutral is needed)
- Constant power for output voltages from 48 to 58 Vdc (Output voltage programmable: Off, and from 42 to 58 Vdc)
- Communications choices: RS485 or PMBus compliant Dual redundant I2C serial bus with +5V aux @ 2A
- Operates over a broad temperature range: –40°C through +75°C (Output derates at 2% per °C beginning at +55 °C)
- Fail safe performance – Internal faults isolated from output bus; hot insertion capabilities allow for rectifier replacement without system shutdown; soft start and inrush current protection prevent nuisance tripping of upstream breakers.
- Extended service life – parallel operation with automatic load sharing ensures that units are not unduly stressed
- Simple Human Factors – 3 front panel LEDs indicate AC good (Green), DC good (Green) or Fault (Red)
- Agency Compliant – EN/IEC/UL/CSA C22.2 60950-1 2nd edition +A1, CE mark, FCC part 15, EN55022 Class A, EN61000 immunity and transient, EN/IEC 61000-3-2 and EN 60555-2 Power factor correction, IPC 9592 Class II Shock & Vibration, NEBS GR-1089, GR-63-CORE, RoHS6/6.

Electrical Specifications

Input

PARAMETER	SYMBOL	MIN	TYP	MAX	UNIT
Startup Input Voltage	V_{IN}	300		320	V_{ac}
Operating Voltage Range (3Ødelta with safety frame ground)	V_{IN}	320	380/480	530	V_{ac}
Voltage Swell (no damage)	V_{IN}			600	V_{ac}
Frequency	F_{IN}	47	50/60	66	H_z
Operating Current (3Ø - all phases operational)	I_{IN}		10-8		A_{dc}
Inrush Transient (per Ø at 480V_{ac}, 25°C, excluding X-Capacitor charging)	I_{IN}		25	30	A_{pk}
Leakage Current (per Ø, 530V_{ac}, 60Hz)	I_{IN}		5		%
Power Factor (50 – 100% load)	PF	0.96	0.995		
Efficiency (480V_{ac} @ 25°C from 50 to 100% load)	η		96.5		%
Holdup Time (output allowed to decay down to 40V_{dc})	T		12		ms
Ride Through (at 480V_{ac}, 25°C)	T		1/2		cycle

Output -52VDC Main

PARAMETER	SYMBOL	MIN	TYP	MAX	UNIT
Output Power (430 – 530V_{ac} - 3Ø, T_{amb} = 45°C $\|V_{out}\|$> 48V_{dc})	W	6000			W_{dc}
Default Set Point	V_{OUT}		52		V_{dc}
Overall Regulation (load, temperature, aging) 0 - 45°C, LOAD > 2.5A > 45°C Regulation with Controller		-2 -0.05		+2 +0.05	% %
Output Voltage Set Range - Set by firmware		42		58	V_{dc}
Output Current (54 / 52V_{dc}, T_{amb} = 45°C)	I_{Out}	1		111 / 115	A_{dc}
Output Ripple Peak-to-Peak (5Hz to 20MHz)	V_{OUT}			250	mV_{p-p}
External Bulk Load Capacitance	C_{OUT}	0		1700	η F/A

Environmental, Compliance & Physical

Operating Ambient Temperature Range	-40°C to +75°C (Output derates at 2%/°C beginning at 55°C)
Cooling Method	Front to back airflow with onboard temperature controlled fans
Operating Relative Humidity	0 - 95% (non-condensing) for use in a controlled environment
Electromagnetic Compatibility	FCC Part 15, EN 55022 (CISPR22), EN 55024, Level A, GR-1089
Agency Certifications* Planned	UL1950, EN60950, CSA˜234/950, NEBS GR-1089, GR-63-CORE, CE Mark, RoHS 6/6
Heat Release	217 Watts, or 740 BTU/hr at full load of 6000 Watts
Acoustic Noise	<58dBA @ 25°C
Mean Time Between Failure (MTBF)	300k Hours @ 25°C per Telcordia SR-332, Method 1, Case 3
Height x Width x Depth, Weight, Packaged Weight	1.61x7.97x17.36in (41x202x441mm), 8.95 lbs (4.1 kg), 9.85 lbs (4.5 kg)

Ordering Options

PRODUCT CODE	DESCRIPTION	OUTPUT VOLTAGE	COMCODE
GP100H3R48TEZ	110A rectifier with isolated RS485 communications	52V	150034309
GP100H3R48TEZ-IN	110A rectifier with isolated RS485 communications	48V	150045497
GP100H3M54TEZ	110A rectifier with isolated dual I²C communications	54V	150039274

GE
Critical Power
601 Shiloh Road
Plano, TX 75074
+1 877 546 3243
www.gecriticalpower.com

PMBus 80 PLUS planned

GP100AC-FS, Rev. 08/2015

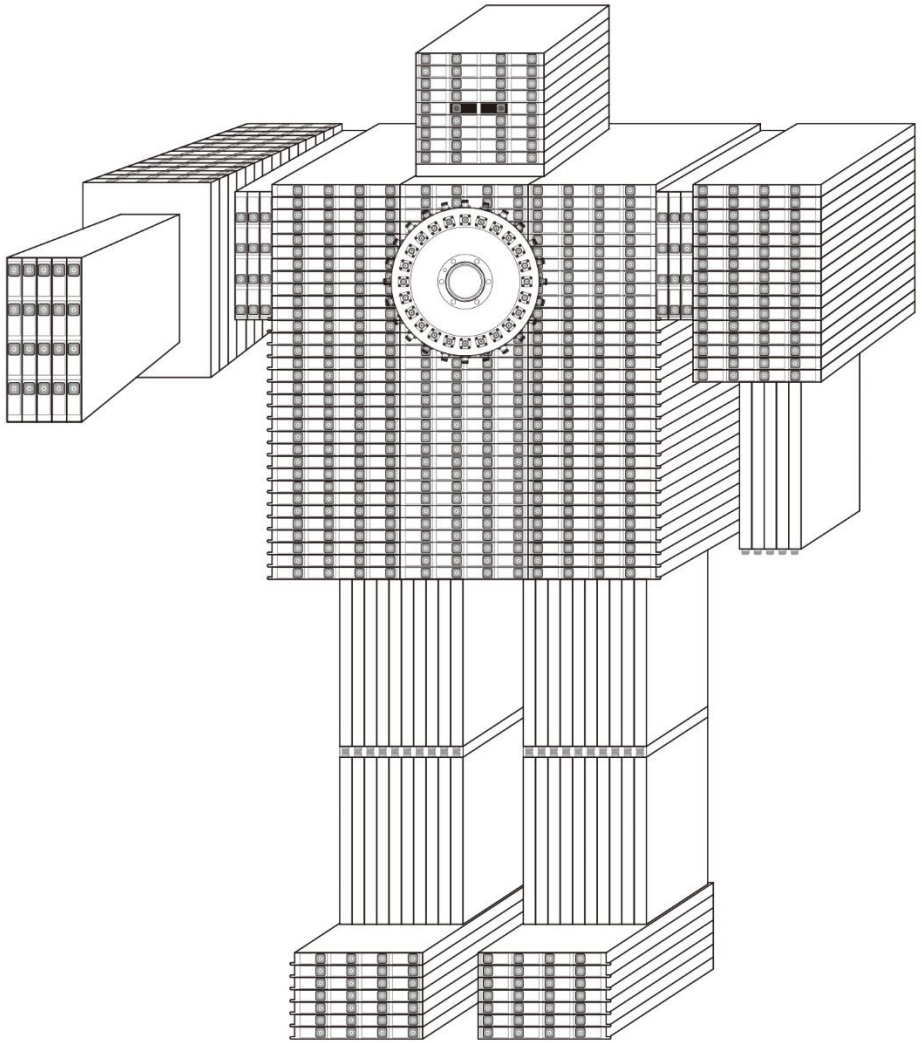

2-G. R&K Technical Capability and Strength

1.3GHz ≥ 3.8kW

1.3GHz ≥ 7kW

Single-Stage Combining by Radial Combiner

Conventional way to combine with 90° Hybrid Junction

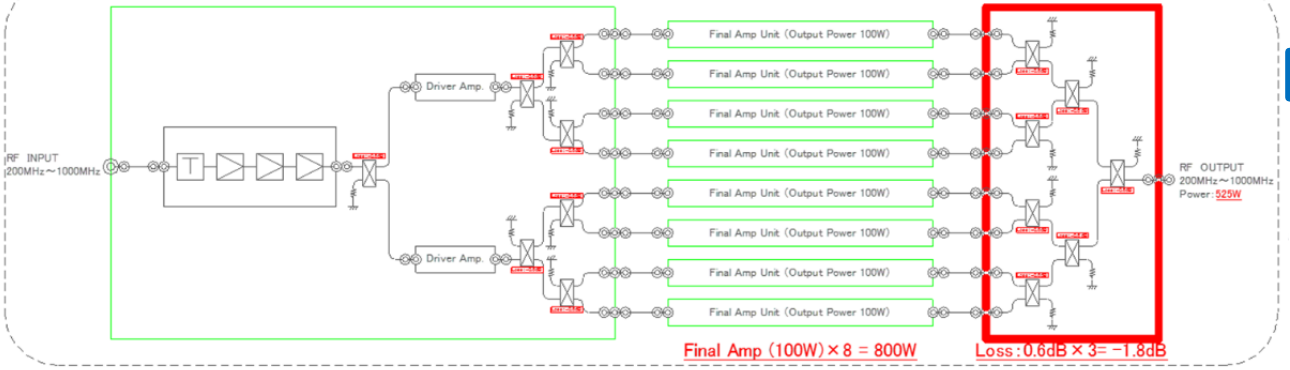

The way to combine with 90° Hybrid Junction

100W×8=800W(+59.0dBm)
(+50dBm + 9.0dB(8-way))
↓
+59.0dBm − 1.8dB = +57.2dBm(525W)

The way to combine with Radial Combiner

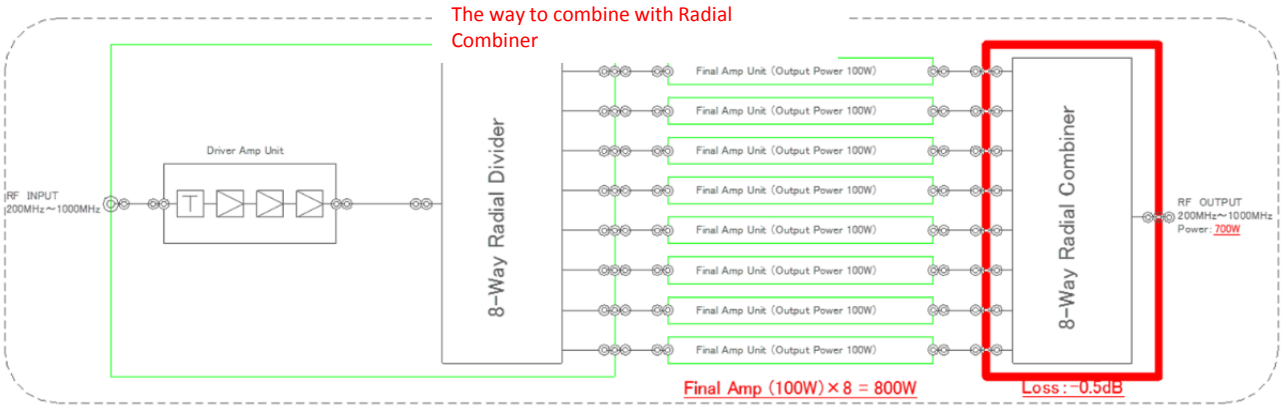

The way to combine with Radial Combiner

100W×8=800W(+59.0dBm)
(+50dBm + 9.0dB(8-way))
↓
+59.0dBm − 0.5dB = +58.5dBm(700W)

The output power is larger than the way with 90° Hybrid Junction

The biggest feature of the radial combiner: small insertion loss

Low insertion loss enhances redundancy at input/output power ⇒ Input/output linearity becomes better
Low insertion loss reduces calorific value ⇒ Long-term reliability becomes better

Multi Monitoring System

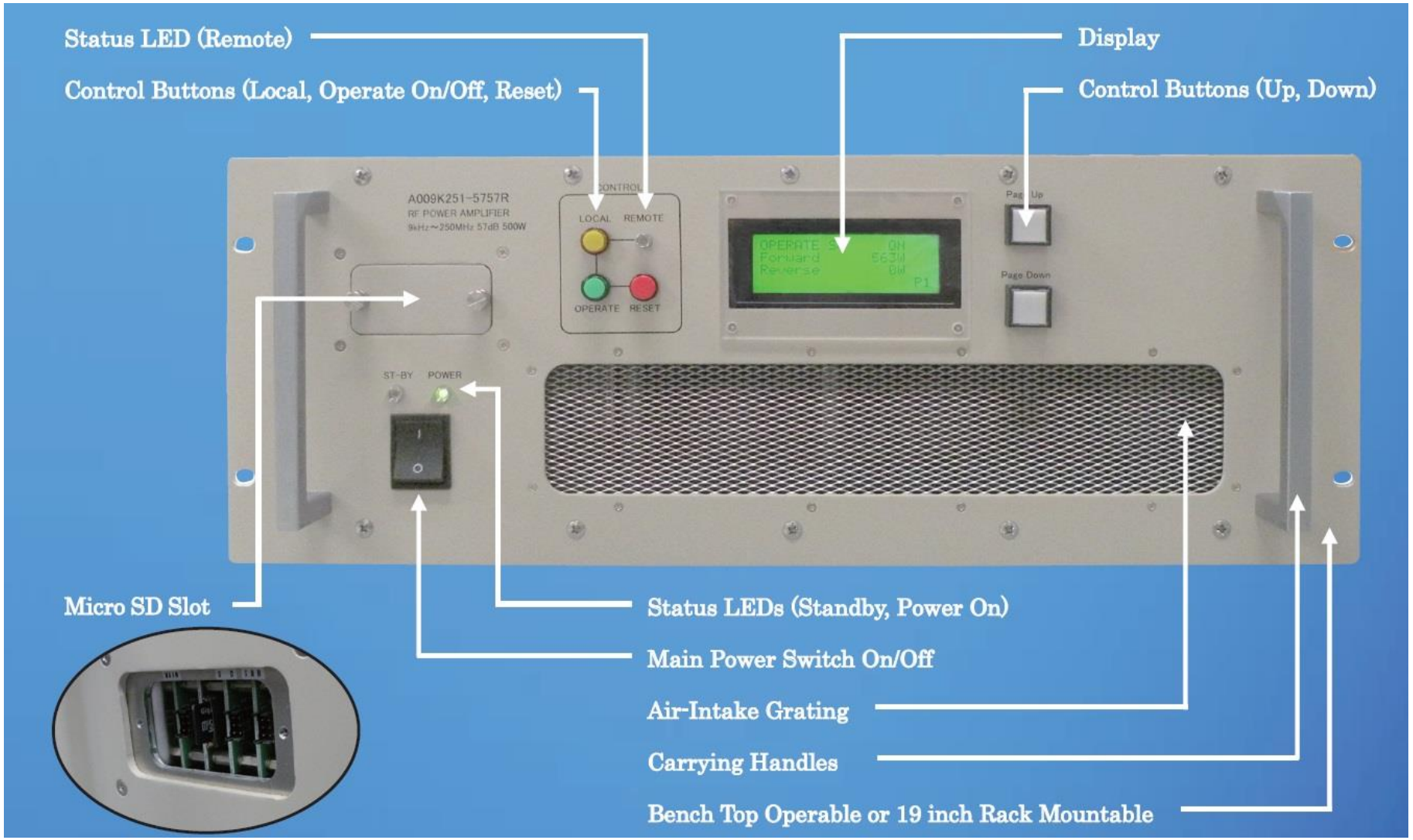

Multi Monitoring System

〔写真〕進行波出力電力、反射電力

〔写真〕詳細な動作状態

〔写真〕小型LCDメーター

ＵＳＢメモリに監視データを10年以上保存可能！ ⇒ 過去が見える！！

監視データをＴＦＴ or ＬＣＤにて常時確認可能！ ⇒ 現在が見える！！

長期間使用後におけるデータ解析から故障予測も可能！ ⇒ 未来が見える！？

万が一の故障時にも故障箇所の特定が容易！ ⇒ 故障箇所が見える！！

1.【パネル種類】 以下の２種類があります。
- ■①大型 ＴＦＴ ２０文字１５行／カラー
- ■②小型 ＬＣＤ ２０文字 ４行／バックライト２色

2.【表示内容】 使用中、常に以下の項目を表示します。
- ■RF-SWのON/OFF状態、進行波出力電力、反射電力

3.【アラーム表示】 アラーム発生時、以下の内容を表示します。
- ■・過大出力 ・過大反射 ・温度異常 ・電源異常
- ■・デバイス消費電流異常 ・デバイス供給電圧異常 ・エマージェンシー

4.【保守点検】 コマンド入力により、以下の動作状態を表示／確認が可能です。
- ■・内部アンプモジュール毎のデバイス消費電流、供給電圧
- ■・アンプユニット毎の筐体内部温度

5.【データ保存】 監視記録データを内部USBメモリに10年以上保存が可能です。
- ■・使用年月日、動作時間 ：1ポイント／分 ⇒ 10年
  ：1ポイント／秒 ⇒ 60日
- ■・進行波出力電力、反射電力
- ■・内部アンプモジュール毎のデバイス消費電流、供給電圧
- ■・アンプユニット毎の筐体内部温度

6.【解析／検証】 USBメモリからデータを取り出し、動作状態を解析する事が可能です。
- ■・データはテキストファイルで保存される為、エクセルで取り込み、グラフ化する事もできます。
  長期間使用による経年劣化等の解析／検証も可能です。

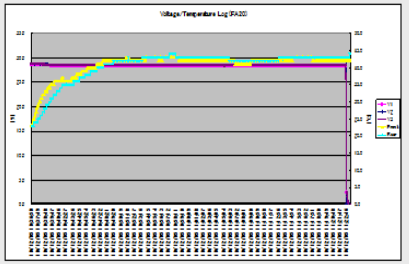

〔参考〕データ解析イメージ1

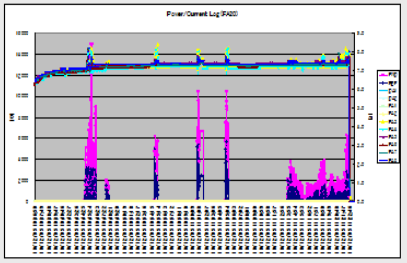

〔参考〕データ解析イメージ2

7.【故障診断】 万が一の故障の際も、故障箇所の特定が容易です。
- ■・内部アンプモジュール毎のデバイス消費電流、供給電圧を常に監視／記録している為、
  万が一増幅器ユニットが故障した場合でも、故障箇所の特定が容易です。

Expandability of SSA

R&K - CA200BW0.4-7282RP

200MHz
150kW

200MHz
200kW

R&K's SSA can expand its output power by Building Block Construction that is expandable system hardware architecture designed to add final amplifier units and capacitor bank units later when more output power is required for test or application at the user.

e.g.
In this case, output power can increase from 150kW to 200kW by adding one set of Final Amp Unit and Capacitor Bank Unit, and replacing a Radial Combiner from 36-way to 48-way.

R&K - CA200BW0.4-7383RP

3-E. Architectural Change of SSA and Innovation

HAPS
(High Availability Power Supply)

Previously..

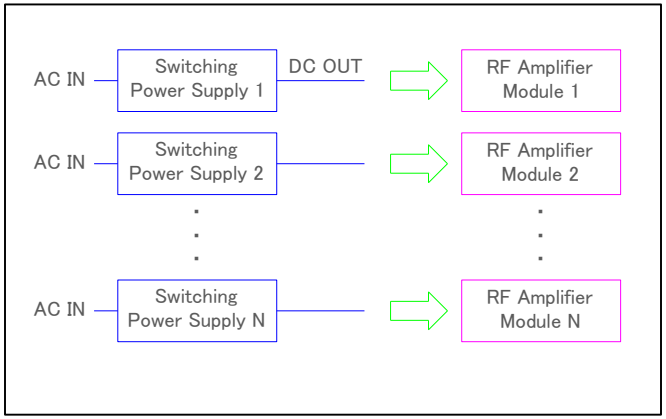

Use “Diode” for N+1 Redundancy

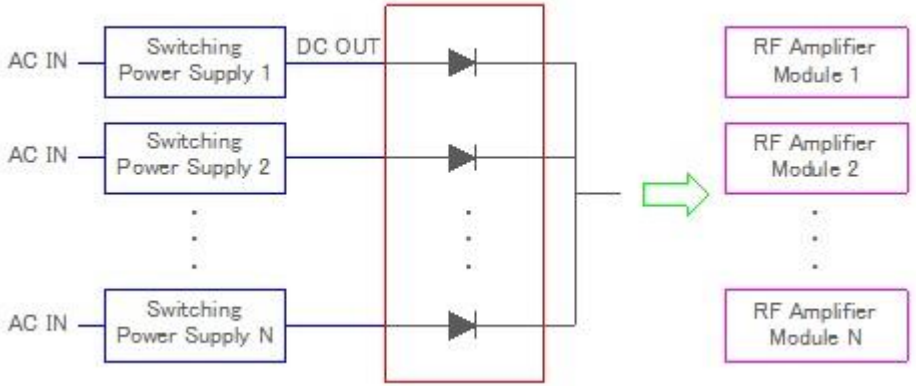

Use “MOSFET” for N+1 Redundancy

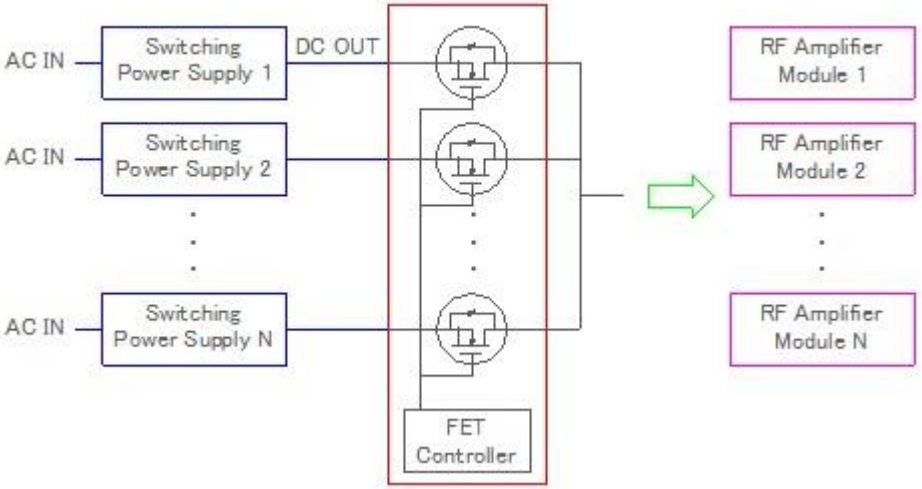

NXP Transistor Product Introduction

Freescale Semiconductor
Technical Data

Document Number: MRFE6VP61K25H
Rev. 4.1, 3/2014

RoHS

RF Power LDMOS Transistors

High Ruggedness N-Channel
Enhancement-Mode Lateral MOSFETs

MRFE6VP61K25HR6
MRFE6VP61K25HR5
MRFE6VP61K25HSR5
MRFE6VP61K25GSR5

1.8–600 MHz, 1250 W CW, 50 V
WIDEBAND
RF POWER LDMOS TRANSISTORS

These high ruggedness devices are designed for use in high VSWR industrial (including laser and plasma exciters), broadcast (analog and digital), aerospace and radio/land mobile applications. They are unmatched input and output designs allowing wide frequency range utilization, between 1.8 and 600 MHz.

- Typical Performance: V_{DD} = 50 Volts, I_{DQ} = 100 mA

Signal Type	P_{out} (W)	f (MHz)	G_{ps} (dB)	η_D (%)
Pulse (100 μsec, 20% Duty Cycle)	1250 Peak	230	24.0	74.0
CW	1250 CW	230	22.9	74.6

Application Circuits (1) — Typical Performance

Frequency (MHz)	Signal Type	P_{out} (W)	G_{ps} (dB)	η_D (%)
27	CW	1300	27	81
40	CW	1300	26	85
81.36	CW	1250	27	84
87.5–108	CW	1100	24	80
144–148	CW	1250	26	78
170–230	DVB-T	225	25	30
352	Pulse (200 μsec, 20% Duty Cycle)	1250	21.5	66
352	CW	1150	20.5	68
500	CW	1000	18	58

1. Contact your local Freescale sales office for additional information on specific circuit designs.

Load Mismatch/Ruggedness

Frequency (MHz)	Signal Type	VSWR	P_{out} (W)	Test Voltage	Result
230	Pulse (100 μsec, 20% Duty Cycle)	> 65:1 at all Phase Angles	1500 Peak (3 dB Overdrive)	50	No Device Degradation

Features

- Unmatched Input and Output Allowing Wide Frequency Range Utilization
- Device can be used Single-Ended or in a Push-Pull Configuration
- Qualified Up to a Maximum of 50 V_{DD} Operation
- Characterized from 30 V to 50 V for Extended Power Range
- Suitable for Linear Application with Appropriate Biasing
- Integrated ESD Protection with Greater Negative Gate-Source Voltage Range for Improved Class C Operation
- Characterized with Series Equivalent Large-Signal Impedance Parameters
- In Tape and Reel. R6 Suffix = 150 Units, 56 mm Tape Width, 13-inch Reel. R5 Suffix = 50 Units, 56 mm Tape Width, 13-inch Reel.

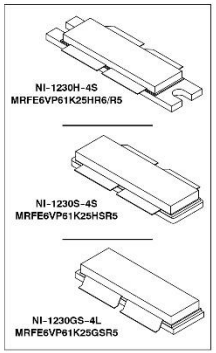

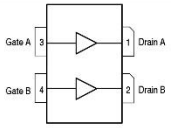

(Top View)

Note: The backside of the package is the source terminal for the transistors.

Figure 1. Pin Connections

freescale

Freescale Semiconductor
Technical Data

Document Number: MRFE6VP8600H
Rev. 1, 9/2011

RoHS

RF Power LDMOS Transistors

High Ruggedness N-Channel
Enhancement-Mode Lateral MOSFETs

MRFE6VP8600HR6
MRFE6VP8600HR5
MRFE6VP8600HSR6
MRFE6VP8600HSR5

470–860 MHz, 600 W, 50 V
LDMOS BROADBAND
RF POWER TRANSISTORS

Optimized for broadband operation from 470 to 860 MHz. Device has an integrated input matching network for better power distribution. These devices are ideally suited for use in analog or digital television transmitters.

- Typical Narrowband Performance: V_{DD} = 50 Volts, I_{DQ} = 1400 mA, Channel Bandwidth = 8 MHz, Input Signal PAR = 9.5 dB @ 0.01% Probability on CCDF. ACPR measured in 7.61 MHz Signal Bandwidth @ ±4 MHz Offset with an Integration Bandwidth of 4 kHz.

Signal Type	P_{out} (W)	f (MHz)	G_{ps} (dB)	η_D (%)	ACPR (dBc)	IRL (dB)
DVB-T (8k OFDM)	125 Avg.	860	19.3	30.0	-60.5	-12

- Typical Pulsed Broadband Performance: V_{DD} = 50 Volts, I_{DQ} = 1400 mA, Pulsed Width = 100 μsec, Duty Cycle = 10%

Signal Type	P_{out} (W)	f (MHz)	G_{ps} (dB)	η_D (%)
Pulsed	600 Peak	470	19.3	47.1
		650	20.0	53.1
		860	18.8	48.9

Features

- Capable of Handling >65:1 VSWR through all Phase Angles @ 50 Vdc, 860 MHz, DVB-T (8k OFDM) 240 Watts Avg. Output Power (3 dB Input Overdrive from Rated P_{out})
- Exceptional Efficiency for Class AB Analog or Digital Television Operation
- Full Performance across Complete UHF TV Spectrum, 470-860 MHz
- Capable of 600 Watt CW Output Power with Adequate Thermal Management
- Integrated Input Matching
- Extended Negative Gate-Source Voltage Range of -6.0 V to +10 V
  - Improves Class C Performance, e.g. in a Doherty Peaking Stage
  - Enables Fast, Easy and Complete Shutdown of the Amplifier
- Characterized from 20 V to 50 V for Extended Operating Range for use with Drain Modulation
- Excellent Thermal Characteristics
- RoHS Compliant
- In Tape and Reel. R6 Suffix = 150 Units, 56 mm Tape Width, 13 inch Reel. R5 Suffix = 50 Units, 56 mm Tape Width, 13 inch Reel.

Table 1. Maximum Ratings

Rating	Symbol	Value	Unit
Drain-Source Voltage	V_{DSS}	-0.5, +130	Vdc
Gate-Source Voltage	V_{GS}	-6.0, +10	Vdc
Storage Temperature Range	T_{stg}	-65 to +150	°C
Case Operating Temperature	T_C	150	°C
Total Device Dissipation @ T_C = 25°C Derate above 25°C	P_D	1052 5.26	W W/°C
Operating Junction Temperature (1,2)	T_J	225	°C

1. Continuous use at maximum temperature will affect MTTF.
2. MTTF calculator available at http://www.freescale.com/rf. Select Software & Tools/Development Tools/Calculators to access MTTF calculators by product.

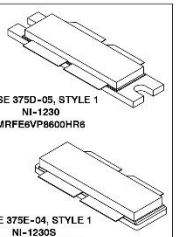

PARTS ARE PUSH-PULL

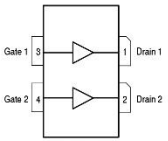

(Top View)

Note: The backside of the package is the source terminal for the transistor.

Figure 1. Pin Connections

freescale semiconductor

NXP Semiconductors
Technical Data

Document Number: MRF13750H
Rev. 1, 01/2018

RoHS

RF Power LDMOS Transistors

N-Channel Enhancement-Mode Lateral MOSFETs

MRF13750H
MRF13750HS

700–1300 MHz, 750 W CW, 50 V
RF POWER LDMOS TRANSISTORS

These 750 W CW transistors are designed for industrial, scientific and medical (ISM) applications in the 700 to 1300 MHz frequency range. The transistors are capable of CW or pulse power in narrowband operation.

Typical Performance: V_{DD} = 50 Vdc

Frequency (MHz)	Signal Type	P_{out} (W)	G_{ps} (dB)	η_D (%)
915 (1)	CW	750	19.3	67.1
915 (2)	Pulse (100 μsec, 10% Duty Cycle)	850	20.5	69.2
1300 (3)	CW	700	17.2	56.0

Load Mismatch/Ruggedness

Frequency (MHz)	Signal Type	VSWR	P_{in} (W)	Test Voltage	Result
915 (2)	Pulse (100 μsec, 10% Duty Cycle)	> 10:1 at all Phase Angles	15.9 Peak (3 dB Overdrive)	50	No Device Degradation

1. Measured in 915 MHz narrowband reference circuit (page 5).
2. Measured in 915 MHz narrowband production test fixture (page 11).
3. Measured in 1300 MHz narrowband reference circuit (page 8).

Features

- Internally input pre-matched for ease of use
- Device can be used single-ended or in a push-pull configuration
- Characterized for 30 to 50 V
- Suitable for linear applications with appropriate biasing
- Integrated ESD protection
- Recommended driver: MRFE6VS25GN (25 W)
- Included in NXP product longevity program with assured supply for a minimum of 15 years after launch

Typical Applications

- 915 MHz industrial heating/welding systems
- 1300 MHz particle accelerators

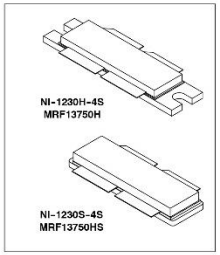

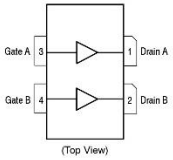

(Top View)

Note: The backside of the package is the source terminal for the transistor.

Figure 1. Pin Connections

Layout at Eight HPRF Penetrations in L3 Includes all Variations of the LCLS II 1.3 GHz

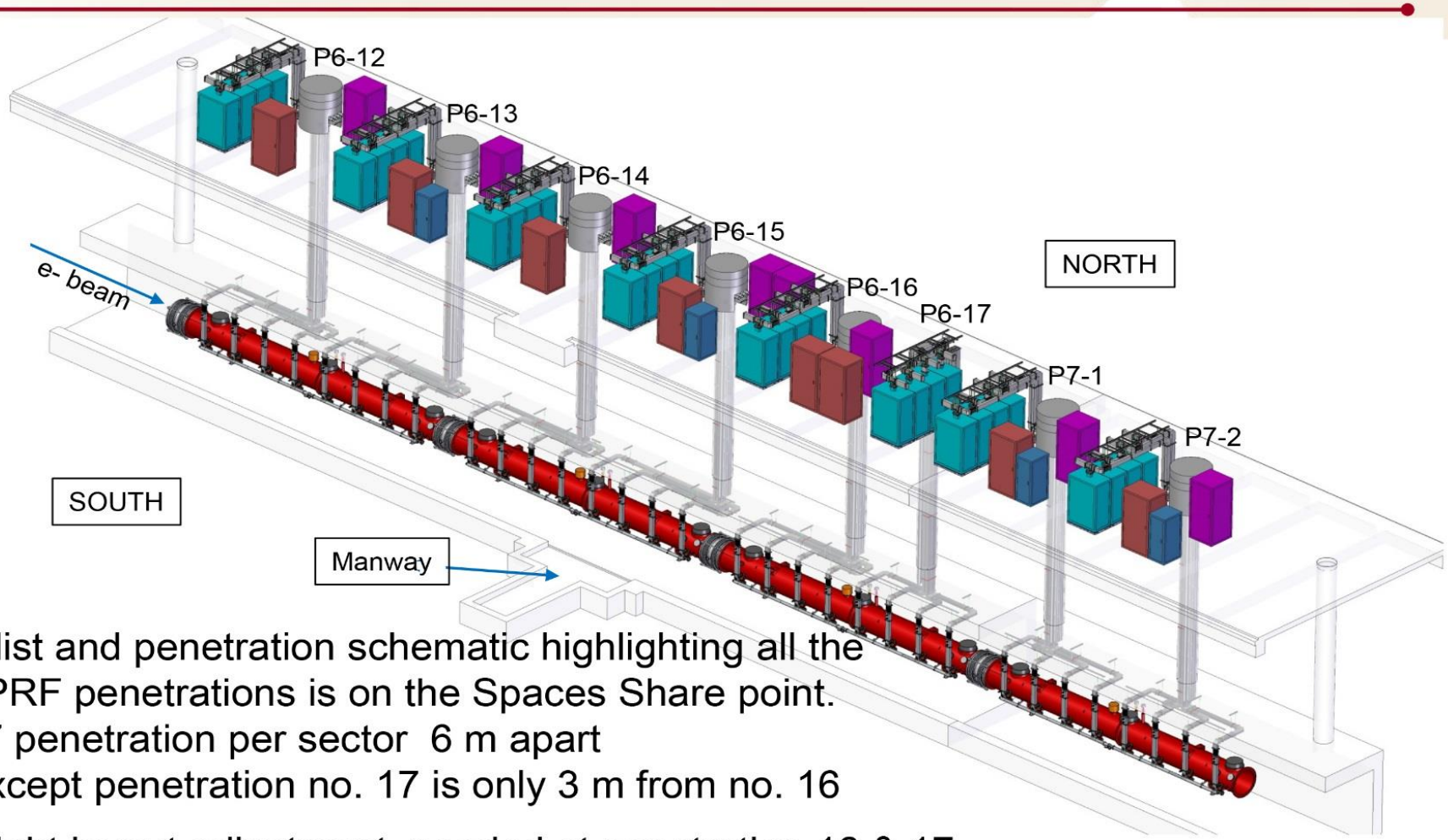

- A list and penetration schematic highlighting all the HPRF penetrations is on the Spaces Share point.
- 17 penetration per sector 6 m apart except penetration no. 17 is only 3 m from no. 16
- Slight layout adjustment needed at penetration 16 & 17
- A section of L3 has every possible variation included

Nantista, Stewart w/ team input

R&K 7 1.3 GHz SSAs at R&K Prior to Shipment

- 6 of these were shipped to FNAL and JLAB (3 each) in Januarry, 2016 for Cyro Cavity Tests.
- 1 of these was left at R&K for 2.5 months for long term tests
  - Continuous running for 2 months.
  - PA Module Swap tests from SSA to SSA show remarkable compatability – important for operations when swapping w/spares
- 4 more delivered to FNAL and 5 more to JLAB in April 2016 for full complement to test one Cryo Module with 8 Cavities. (Note FNAL already had one SSA capable of 3.8 KW output.)

[Old Method] LPDC (10MW KLYSTRON Multi-Branch Connection) RF Power Amplifier for ILC Cavity-Driven Architecture

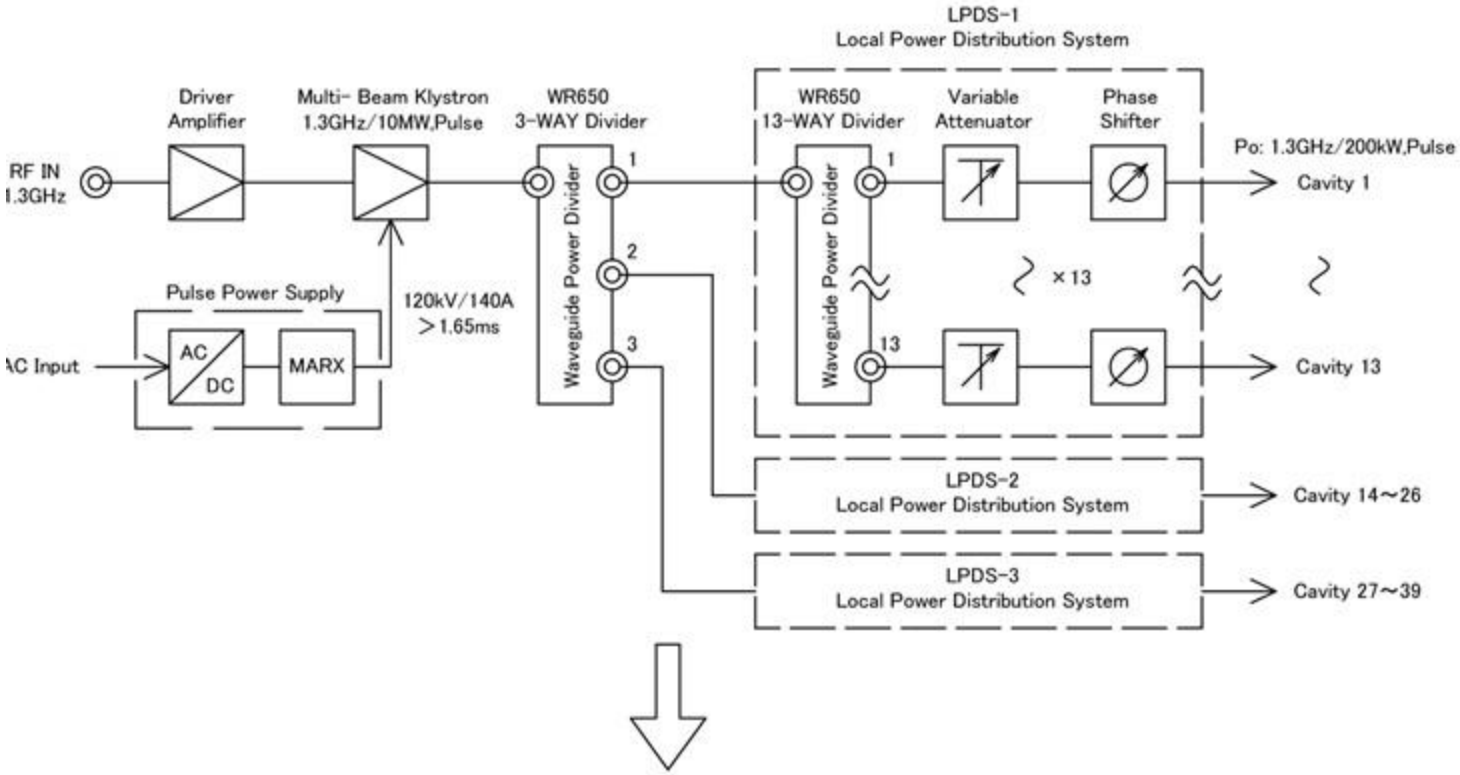

[New Proposal] "Single Source Single Cavity" Architecture (Solid-State Power Amplifier 200kW, Pulse x 39)

Cost Reduction through Standardization & Mass Production

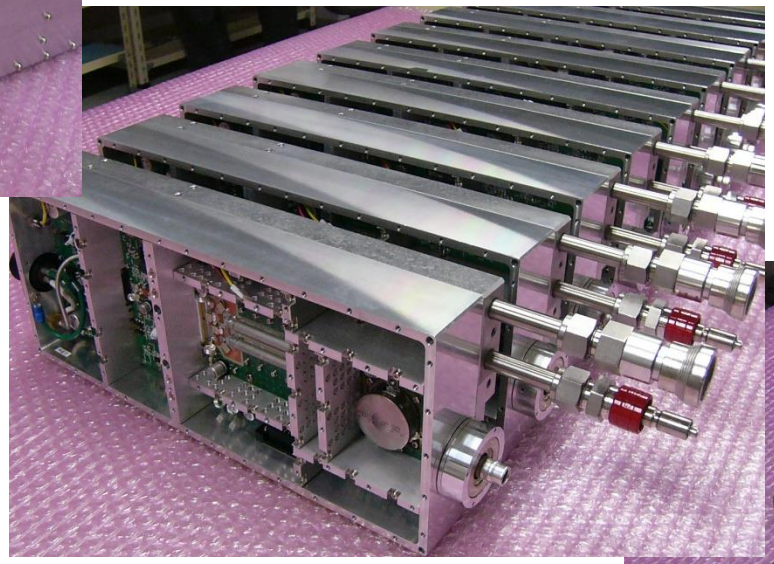

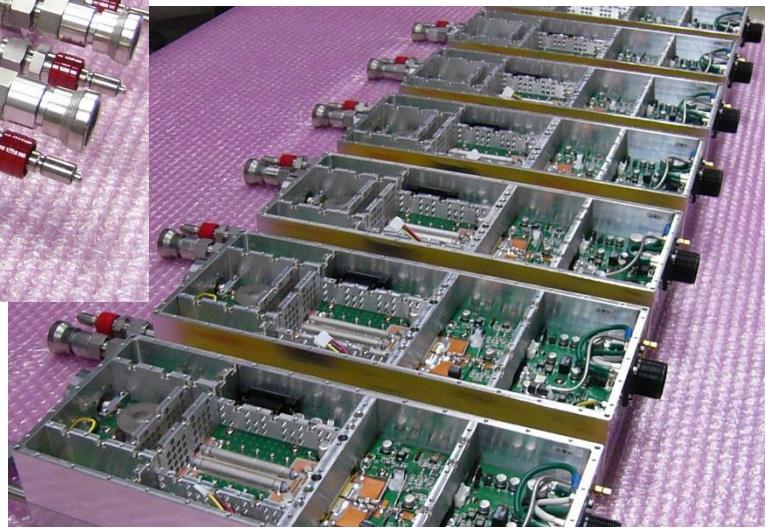

Ultra-high Stability of Single Source Single Cavity Structure

Digital LLRF

The Libera LLRF is a digital processing and feedback system which monitors and stabilizes the quality of the beam acceleration by controlling the phase and amplitude of the RF field injected into the machine accelerating structures.

Being designed to be modular and reconfigurable, the system can fit the exact requirements of any kind of accelerator, providing three core functions:

- **Stabilization of the cavities' RF fields:** depending on the RF signals acquired from the accelerating structures and the set-point specified by the user, the fast feedback loop controls the properties of the RF signal, which is later used to drive the Klystrons.
- **Cavity tuning:** by monitoring the forward and reflected signals from the RF cavities, the system can be interfaced to control slow and fast tuners (e.g. stepper motors and piezo controllers) which modify the cavity mechanical properties.
- **Machine Diagnostics:** the user is able to analyze all the signals digitized by the system, as well as the status of the feedback loop. Several signals can also be monitored by the system in order to generate Interlock events if something unexpected happens.

The block diagram presented in Figure 13 presents a possible configuration of Libera LLRF in the accelerator environment:

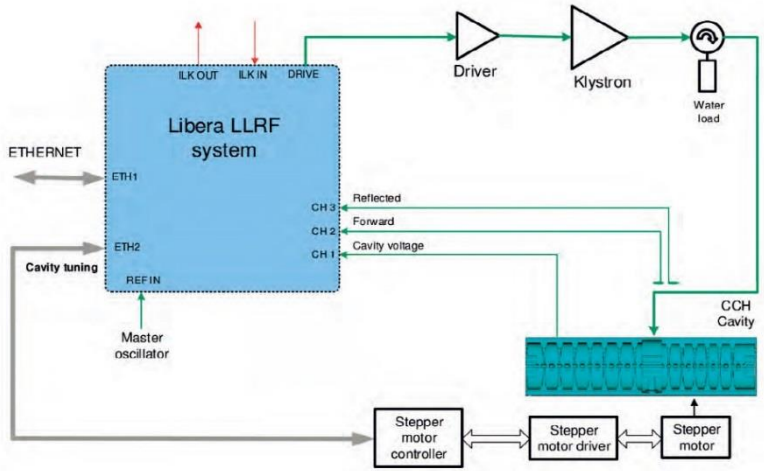

Figure 13: Possible configuration of Libera LLRF in the accelerator environment

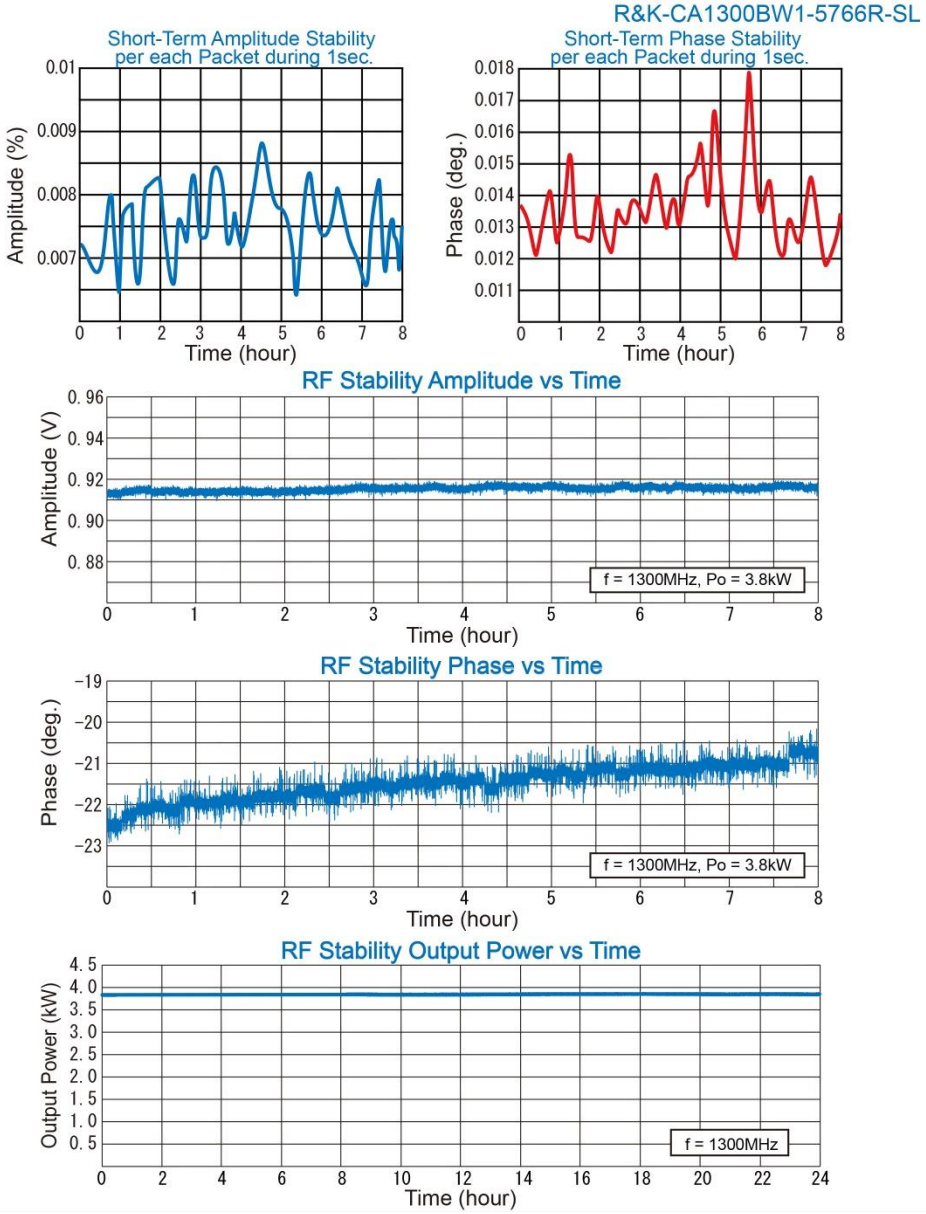

Basic Layout at a typical LCLS-II 1.3 GHz HPRF Penetration Installation Level Waveguide Layout 80% Complete

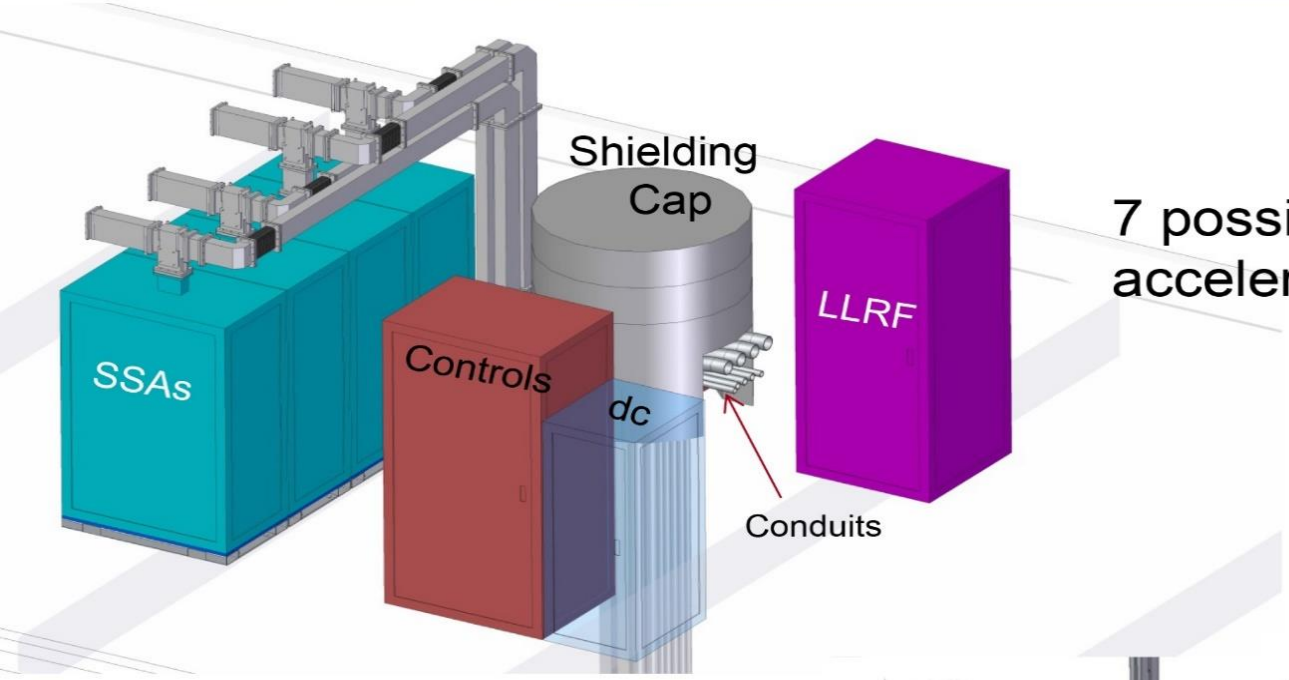

7 possible variations at the accelerator housing ceiling.

Nantista, Stewart w/ team input

WG routs in the tunnel optimized for proximity of penetration to the Cryomodule.

[New Proposal] Single Source Single Cavity (SSSC) Architecture

SLAC-PUB-17108

HIGH PRECISION RF CONTROL FOR SRF CAVITIES IN LCLS-II

L. Doolittle*, K. Campbell, Q. Du, G. Huang, J. Jones,
C. Serrano, V. Vytla, LBNL, Berkeley, CA 94720, USA
S. Babel, A. Benwell, M. Boyes, G. Brown, D. Cha, G. Dalit, J. DeLong, J. Diaz-Cruz,
B. Hong, R. Kelly, A. McCollough, A. Ratti, C. Rivetta, SLAC, Menlo Park, CA 94720, USA
R. Bachimanchi, C. Hovater, D. Seidman, JLab, Newport News, VA 23606, USA
B. Chase, E. Cullerton, J. Einstein, D. Klepec, FNAL, Batavia, IL 60555, USA

ABSTRACT

The unique properties of SRF cavities enable a new generation of X-ray light sources in XFEL and LCLS-II. The LCLS-II design calls for 280 L-band cavities to be operated in CW mode with a Q_L of 4×10^7, using Single-Source Single-Cavity control. The target RF field stability is 0.01% and 0.01° for the band above 1 Hz. Hardware and software implementing a digital LLRF system has been constructed by a four-lab collaboration to minimize known contributors to cavity RF field fluctuation. Efforts include careful attachment to the phase reference line, and minimizing the effects of RF crosstalk by placing forward and reverse signals in chassis separate from the cavity measurement. A low-noise receiver/digitizer section will allow feedback to operate with high proportional gain without excessive noise being sent to the drive amplifier. Test results will show behavior on prototype cryomodules at FNAL and JLab, ahead of the 2018 final accelerator installation.

INTRODUCTION

LCLS-II is an X-ray Free Electron Laser (FEL) under construction at SLAC, driven by a superconducting RF Linac [1]. The electron beam quality will directly translate to the quality of the X-ray beams produced in undulators and used for scientific research in the end stations; hence strict requirements have been placed on the stability of the accelerating cavity fields. An initial stability goal of 0.01° in phase and 0.01% amplitude has been set for the main Linac, composed of 280 nine-cell 1300 MHz superconducting cavities [2].

Plans for the RF controls for the 1.3 GHz cavities have been described elsewhere [3] [4] [5] [6]. It is based on mainstream digital LLRF technology, and incorporates many ideas developed for LBNL's NGLS proposal [7]. The controls use a Single Source Single Cavity (SSSC) architecture, where each cavity has a dedicated amplifier. SSSC has enormous value for simplifying control of narrow-band SRF cavities, It is also a sensible choice for a CW machine, where Solid-State Amplifier technology has approximately matched Klystrons in price, and they are considered easier to operate and maintain.

The LLRF subsystem of LCLS-II is itself a four-laboratory collaboration: LBNL for architecture, FPGA hardware and RF DSP programming, and ADC/DAC hardware development; Fermilab for downconverters, upconverters and piezo drivers; JLab for interlocks, stepper controls, and power supplies; and SLAC for LO distribution, MO and PRL, global control system integration, commissioning, transition to operations, and project management.

* lrdoolittle@lbl.gov; This work supported under DOE Contract DE-AC02-76SF00515

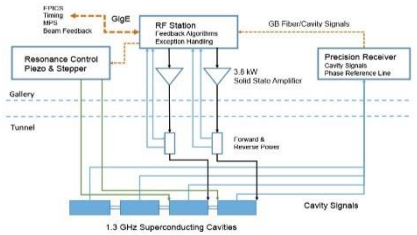

Figure 1: System hardware configuration supporting half of a cryomodule (one of two RF Station chassis shown)

SYSTEM DESIGN

Each rack (supporting four cavities) includes a separate Precision Receiver Chassis (PRC), linked only by optical fiber to two RF Control Chassis (RFS), as shown in figure 1. This density of rack equipment matches the civil layout of the accelerator, where one LLRF rack is cabled to one penetration to the tunnel. The physical separation between PRC and RFS maximizes isolation between the critical stabilized cavity signals and the wildly fluctuating forward and reverse monitoring channels. Preliminary measurements show that this separation has succeeded, in that the measured isolation is at least 125 dB.

The system bypasses some of the usual compromises in choosing an IF by means of an unusual split-LO design, where a low-frequency IF (20 MHz) is used for RF downconversion, and a higher-frequency IF (145 MHz) is used for RF upconversion.

The downconversion IF is 7/33 of the ADC clock rate, yielding near-IQ sampling [8]. The low downconversion IF is good for selecting low-$1/f$-noise amplifiers, and for reducing crosstalk. The 94.3 MHz ADC clock rate is high enough that the whole 9-cell TM_{010} passband (1274-1300 MHz) fits in the first Nyquist zone. The high upconversion IF allows commercial four-section tubular filters with 45 MHz bandwidth to remove the undesired sideband after mixing.

This material is based upon work supported by the U.S. Department of Energy, Office of Science, under Contract No. DE-AC02-76SF00515.

[Old Method] LPDS (10MW KLYSTRON Multi-Branch Connection)

Proceedings of the 13th Annual Meeting of Particle Accelerator Society of Japan
August 8-10, 2016, Chiba, Japan

PASJ2016 MOP038

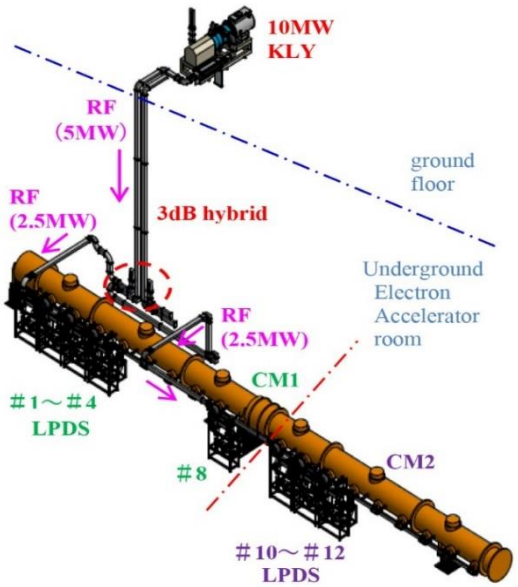

Figure 7: LPDS The small unit.

Table 1: Process of Operation and the Required Time (LPDS The Small Unit)

作業工程	必要人数／所要時間
①アルミ枠設置床へ墨入れ (1 台目のみ)	1 人 ／ 3 時間
②アルミ枠固定	1 人 ／ 1 時間
③導波管サポート材取付け	1 人 ／ 4 時間
④サーキュレータ組込	2 人 ／ 3 時間
⑤ハイブリッツド組込	2 人 ／ 2 時間
⑥フェーズシフター組込	2 人 ／ 2 時間
⑦ダミーロード組込	2 人 ／ 1 時間
⑧導波管の最終接続	2 人 ／ 3 時間
⑨RF 入力試験	1 人 ／10 時間
LPDS 小ユニット 1 台 合計	1～2 人 ／26 時間
LPDS 小ユニット 10 台 合計	1～2 人／260 時間

Source:
Proceedings of the 13th Annual Meeting of Particle Accelerator Society of Japan, "STATUS OF RF POWER DISTRIBUTION SYSTEM CONSTRUCTION FOR ILC IN STF"
Authors:
Norihiko Hanaka, Kazuya Ishimoto, Naoto Numata, Kazuhiko Yasu, Mitsuo Akemoto, Dai Arakawa,
Masato Egi, Hiroaki Katagiri, Tateru Takenaka, Hiromitsu Nakajima, Shigeki Fukuda, Hideki Matsushita,
Toshihiro Matsumoto, Takako Miura, Shinichiro Michizono

Unlike "Single Source Single Cavity" architecture, LPDS (Multi-distributing system for high power klystron power amplifier) consists of power splitter, variable attenuator, phase shifter, isolator, dummy load, and so on. They are combination of passive microwave components, but the structure relies heavily on the mechanical durability.

Extremely complicated mechanical system. In order to achieve long term reliability for phase and power accuracy with 39-way distribution, adjustment by highly skilled and experienced technicians is absolutely necessary. The system is not suitable for simple, highly accurate, and automated operation.

R&K Company Limited

RF/Microwave Power Amplifiers and Components

www.rk-microwave.com